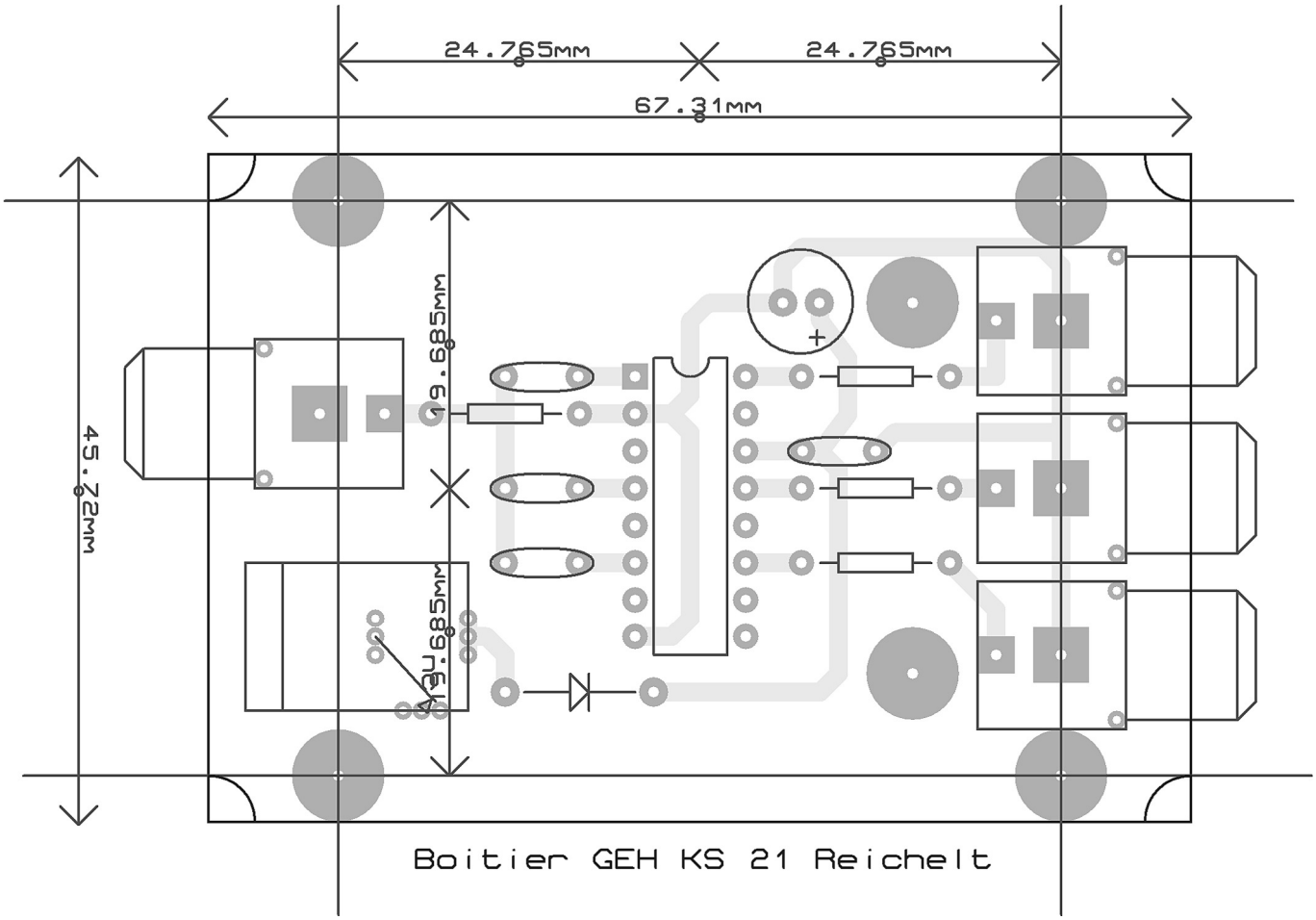
24.765MM
24.765MM
67.31MM
45.72MM
39.685MM
39.685MM
Boitier GEH KS 21 Reichelt